VIBRO/*DYNAMICS*® RFQ – High Speed Press Data Sheet

RESET FORM

Request for: ☐ Quotation ☐ Budgetary Estimate

SUBMIT FORM

H&O DIE SUPPLY, INC
7200 Interstate 20
KENNEDALE TX 76060
Telephone: 1-800-222-5441 214-630-6660
Fax: 214-630-6693
www.hodie.com Email: sales@hodie.com

☐ New Customer Quote No. _____

Customer Number: _____ Date: _____

(*For Office Use Only*)

Salesman:

Territory:

Name: _____ Phone: _____

Title: _____ Fax: _____

Company: _____ Email: _____

Address: _____ City: _____

State/Province: _____ Postal Code: _____ Country: _____

Send quote via:
☐ Fax
☐ Email
☐ Mail

Please provide as much information as possible so that we can recommend the isolators that best fit your needs.

Press Manufacturer: _____

Model Number: _____

Serial Number: _____

Press Weight: _____ ☐ lbs. ☐ kg.

Total Die Weight: _____ ☐ lbs. ☐ kg.

Feed Weight: _____ ☐ lbs. ☐ kg.

Other Weight*: _____ ☐ lbs. ☐ kg.

** Where is it located?* _____

Total weight that is supported by isolator: _____

Flywheel Location: (Check one) ☐ Left Side ☐ Front ☐ Right Side ☐ Rear

Feed Location: (Check one) ☐ Left Side ☐ Front ☐ Right Side ☐ Rear

Motor Location: (Check one) ☐ Left Side ☐ Front ☐ Right Side ☐ Rear

Press Operation: (Check one) ☐ Blanking ☐ Forming ☐ Drawing ☐ Coining ☐ Other: _____

Tonnage Required by Operation: _____

Is there sensitive equipment nearby? ☐ Yes ☐ No

VERTICAL INERTIAL FORCE INFORMATION

Operating Speed (SPM): _____

Startup Speed (SPM): _____

Is the crankshaft fully counterweighted? ☐ Yes ☐ No

What is the magnitude of the unbalanced horizontal inertia force? _____

Direction of Crankshaft: ☐ Left-to-Right ☐ Front-to-Back

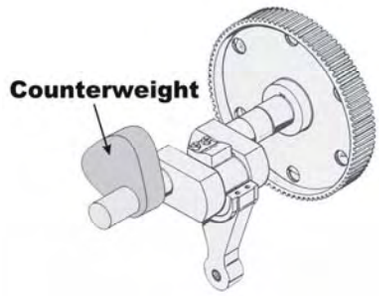

Does press have a dynamic balancer? ☐ Yes ☐ No

If so, what type is it? ☐ Reciprocating ☐ Rotating

Percentage Balanced: _____

		MAIN SLIDE	BALANCE SLIDE**
Slide Assembly Weight:	☐ lbs. ☐ kg.		
Upper Die Weight:	☐ lbs. ☐ kg.		
Stroke Length:	☐ inch ☐ mm		
Connection Length:	☐ inch ☐ mm		

*** Balance slide information not required if percentage balance information is known and listed at the beginning of this section. However, main slide information is still required.*

Dynamic Balancer Types

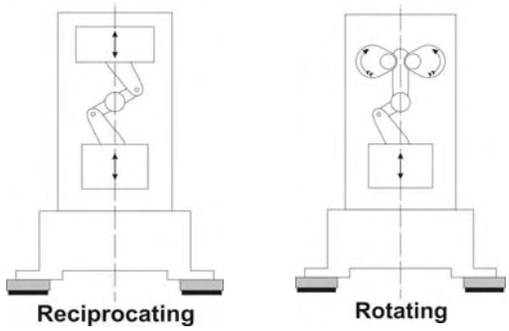

Form #: S-8 Rev: 5 2006.03

PRESS PLAN VIEW DIMENSIONS

Please Indicate Units of Measure

☐ **English (in.)** ☐ **Metric (mm)**

Height of Center-of-Gravity from Press Feet: _____

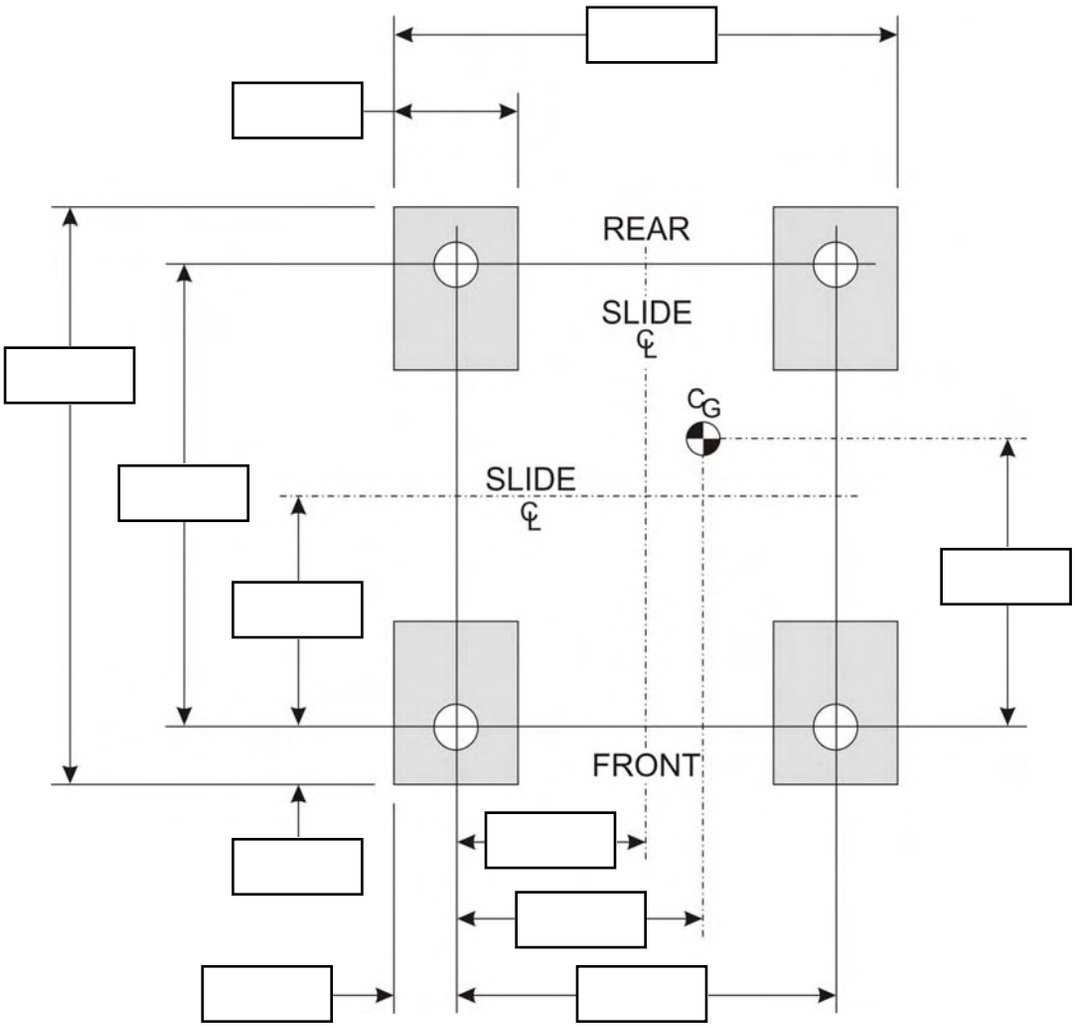

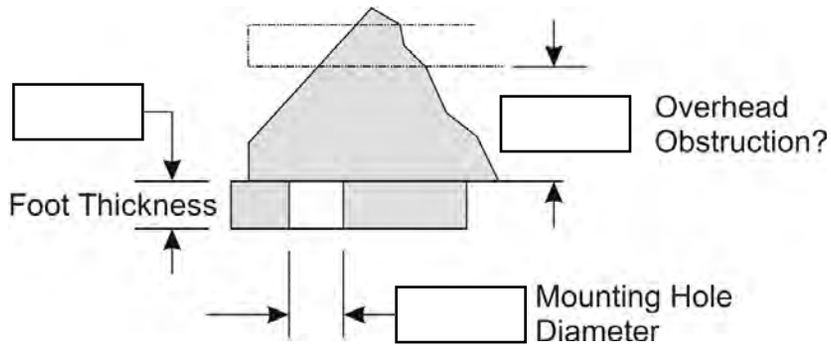

Number of Mounting Holes: _____
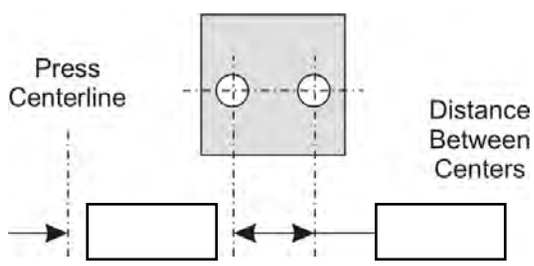
If press has two mounting holes per foot, provide the following dimensions